Steatite; Used in the production of the insulating parts having higher electrical and mechanical strength than conventional porcelain materials.

Steatite terminals contact material is special alloy steel and thermal operating temperature 1100 ºC ' reaches up. It also carries ONKA steatite terminal block on 1000 ºC 'n operating temperature automatically.

Advantages in comparison to ceramics:

- Higher mechanical strength,
- Higher dimensional stability,
- Higher temperature resistance (1000 ºC and over)
- Higher acid resistance,
- longer lifespan,
- It has an insulating surface and surface electrical leakage is zero, this material is more efficient

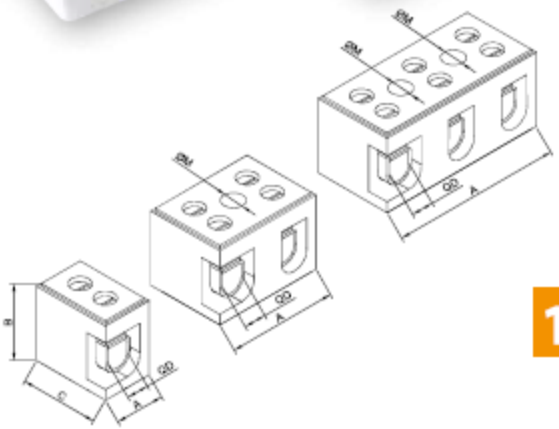

1100 °C

MATERIAL	
Isolation Material	Steatite
Contact	CK45 Steel
Work Temperature	Max. 1100 ºC
Connection Type	Screw / Steel
Norm	EN-60998-2-1

* U_{imp} : Impact strength voltage

DESCIRIPTIONS

NEW CODE	OLD CODE	Name	Pole	Cable Section (mm²)	A (mm)	B (mm)	C (mm)	D Ø (mm)	M Ø (mm)	Pcs.
1070001	ONKA-5081	No. 0/2	2	0,75 - 1,50	22	16,5	18,5	4	4,3	100
1070002	ONKA-5082	No. 1/2	2	2,50 - 4,00	22,5	17	19	5	4,3	150
1070003	ONKA-5083	No. 1/3	3	2,50 - 4,00	36	17	19	5	4,3	100
1070004	ONKA-5084	No. 2/2	2	4,00 - 6,00	27	18,5	22	6	4,3	100
1070005	ONKA-5085	No. 2/3	3	4,00 - 6,00	40	18,5	22	6	4,3	50
1070006	ONKA-5086	No. 3/2	2	6,00 - 10,00	34	24,5	30	7	5,2	50
1070007	ONKA-5087	No. 3/3	3	6,00 - 10,00	51,5	25	30	7	5,2	35
1070008	ONKA-5088	No. 0/1	1	0,75 - 1,50	11	16,5	18,5	4	-	200
1070009	ONKA-5089	No. 1/1	1	2,50 - 4,00	11,5	17	19	5	-	200
1070010	ONKA-5090	No. 2/1	1	4,00 - 6,00	12	18,8	22	6	-	150
1070011	ONKA-5091	No. 3/1	1	6,00 - 10,00	17	25	30,3	7	-	100
1070013	ONKA-5094	No. 4-5/3	3	16,00 - 25,00	65,6	30	30	11	5,2	20
1070014	ONKA-5095	No. 5/2	2	16,00 - 25,00	42	30	30	11	5,2	20