TERMSERIES
TOS 24VDC 24VDC2A

Weidmüller Interface GmbH & Co. KG
Klingenbergstraße 16
D-32758 Detmold
Germany
Fon: +49 5231 1429-0
Fax: +49 5231 14292083
www.weidmueller.com

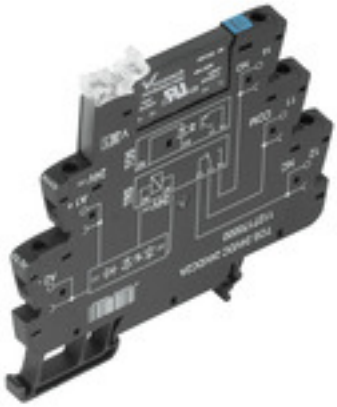

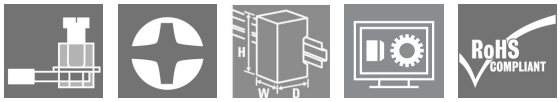

TERMSERIES complete solid-state relay modules 3 to 33 V DC 2 A output versions consisting of
a solid-state relay and a base with AC/DC/UC input;
available in different designs:

- With screw connection
- In 6.4 mm width
- Optionally with multiple-voltage input: 24 to 230 V UC
- With various protective circuits
  in the input (free-wheel diode, RC element)
- Illuminated ejection lever

General ordering data

Type	TOS 24VDC 24VDC2A
Order No.	1127170000
Version	TERMSERIES, solid-state relais, 1 NO contact (MOS-FET), Rated control voltage: 24 V DC ±20 % , Rated switching voltage: 3...33 V DC, Continuous current: 2 A, Screw connection
GTIN (EAN)	4032248908936
Qty.	10 pc(s).

TERMSERIES
TOS 24VDC 24VDC2A

Weidmüller Interface GmbH & Co. KG
Klingenbergstraße 16
D-32758 Detmold
Germany
Fon: +49 5231 1429-0
Fax: +49 5231 14292083
www.weidmueller.com

Technical data

Dimensions and weights

Width	6.4 mm	Width (inches)	0.252 inch
Height	89.6 mm	Height (inches)	3.528 inch
Depth	87.8 mm	Depth (inches)	3.457 inch
Weight	34 g	Net weight	32.2 g

Temperatures

Humidity	5–95% rel. humidity, T_u = 40°C, no condensation	Operating temperature	-20 °C...60 °C
Storage temperature	-40 °C...70 °C		

Probability of failure

MTTF	1,077 Years

Control side

Rated control voltage	24 V DC ±20 %	Nominal control current	11.5 mA DC (±20%)
Power rating	0.29 W	Cut-in / dropout voltage	14 V / 12.5 V DC
Inrush / breaking current	6.2 mA / 5.4 mA DC	Status indicator	Green LED
Protective circuit	Free-wheel diode, Reverse polarity protection	Coil voltage of the replacement relay deviating from the rated control voltage	No
Coil voltage of the replacement relay	24 V DC		

Load side

Rated switching voltage	3...33 V DC	Continuous current	2 A
Rated switching current	2 A	Inrush current	15 A / 10 ms
Switch-on delay	< 60 µs	Switch-off delay	< 600 µs
Voltage drop at max. load	≤ 120 mV	Leakage current	< 10 µA
Min. switching current	5 mA	Short-circuit-proof	No
Protective circuit, load side	Free-wheel diode	max. switching frequency (DC control voltage)	300 Hz

Contact data

Contact type	1 NO contact (MOS-FET)

General data

Mounting rail	TS 35	UL 94 flammability rating	V-0

Insulation coordination

Rated voltage	300 V	Pollution severity	2
Surge voltage category	III	Clearance and creepage distances for control side - load side	≥ 5.5 mm
Dielectric strength for control side - load side	2.5 kV_{eff}	Dielectric strength to mounting rail	4 kV_{eff} / 1 min.
Impulse withstand voltage	6 kV (1.2/50 µs)	Protection degree	IP20

Further details of approvals / standards

Standards	DIN EN 50178	Certificate No. (GERMLLOYD)	47053-12
Certificate no. (cULus)	E141197		

TERMSERIES
TOS 24VDC 24VDC2A

Weidmüller Interface GmbH & Co. KG
Klingenbergstraße 16
D-32758 Detmold
Germany
Fon: +49 5231 1429-0
Fax: +49 5231 14292083
www.weidmueller.com

Technical data

Connection data

Wire connection method	Screw connection	Stripping length, rated connection	8 mm
Tightening torque, max.	0.4 Nm	Clamping range, rated connection	1.5 mm²
Clamping range, rated connection, min.	0.14 mm²	Clamping range, rated connection, max.	2.5 mm²
Wire connection cross section AWG, min.	AWG 26	Wire connection cross section AWG, max.	AWG 14
Wire cross-section, solid, min.	0.14 mm²	Wire cross-section, solid, max.	2.5 mm²
Wire connection cross-section, finely stranded, min.	0.14 mm²	Wire connection cross section, finely stranded, max.	2.5 mm²
Wire cross-section, finely stranded, min. (AWG)	AWG 26	Wire cross-section, finely stranded, max. (AWG)	AWG 14
Cross-section for connected conductor, finely stranded with wire-end ferrules and plastic collars DIN 46228/4, rated connection, min.	0.25 mm²	Wire connection cross-section, finely stranded with wire-end ferrules and plastic collars DIN 46228/4, rated connection, max.	2.5 mm²
Conductor cross-section, flexible, AEH (DIN 46228-1), min.	0.25 mm²	Conductor cross-section, flexible, AEH (DIN 46228-1), max.	2.5 mm²
Wire connection cross section, finely stranded, two clampable wires, min.	0.5 mm²	Wire cross-section, finely stranded, two clampable wires, max.	1 mm²
Blade size	size PH0	Gauge to IEC 60947-1	A1, B1

Rated data UL

Ambient temperature (operational), max.	60 °C	Connection cross-section AWG, min.	AWG 26
Connection cross-section AWG, max.	AWG 14	Type of conductor	rigid copper conductor, flexible copper conductor
Tightening torque, max.	0.4 Nm	Pollution severity level	2

Classifications

ETIM 4.0	EC001504	ETIM 5.0	EC001504
ETIM 6.0	EC001504	eClass 6.2	27-27-09-90
eClass 7.1	27-27-09-90	eClass 8.1	27-27-09-90
eClass 9.0	27-27-09-90	eClass 9.1	27-37-16-04

Product information

Descriptive text ordering data	Spare solid-state relay Type: SSS 24 V/24 V 2 A DC Orderno.: 4061190000
Descriptive text technical data	Accessories and dimensional drawings: refer to the TERMSERIES Accessories page.

Approvals

Approvals	
ROHS	Conform

TERMSERIES
TOS 24VDC 24VDC2A

Weidmüller Interface GmbH & Co. KG
Klingenbergstraße 16
D-32758 Detmold
Germany
Fon: +49 5231 1429-0
Fax: +49 5231 14292083
www.weidmueller.com

Technical data

Downloads

Approval/Certificate/Document of Conformity	DE_PA_5600_160229_002.pdf
Brochure/Catalogue	CAT 4.2 ELECTR 15/16 EN
Engineering Data	EPLAN, WSCAD, Zuken E3.S
User Documentation	Operating Instructions

TERMSERIES
TOS 24VDC 24VDC2A

Weidmüller Interface GmbH & Co. KG
Klingenbergstraße 16
D-32758 Detmold
Germany
Fon: +49 5231 1429-0
Fax: +49 5231 14292083
www.weidmueller.com

Drawings

Circuit diagram

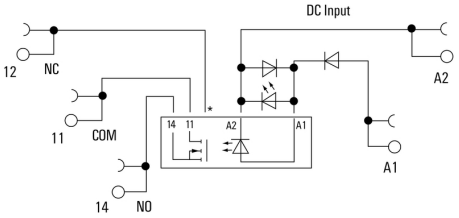

*Conntact is assembled in socket but not used with solid-state relays

Dimensional drawing

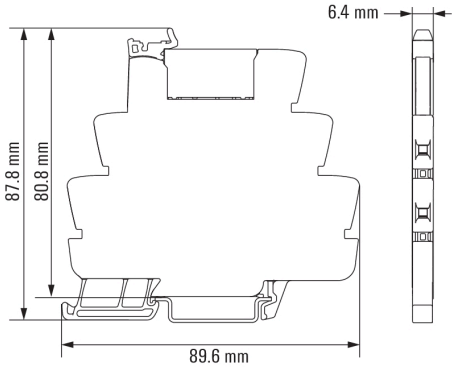

TERMSERIES
TOS 24VDC 24VDC2A

Weidmüller Interface GmbH & Co. KG
Klingenbergstraße 16
D-32758 Detmold
Germany
Fon: +49 5231 1429-0
Fax: +49 5231 14292083
www.weidmueller.com

Drawings

Miscellaneous

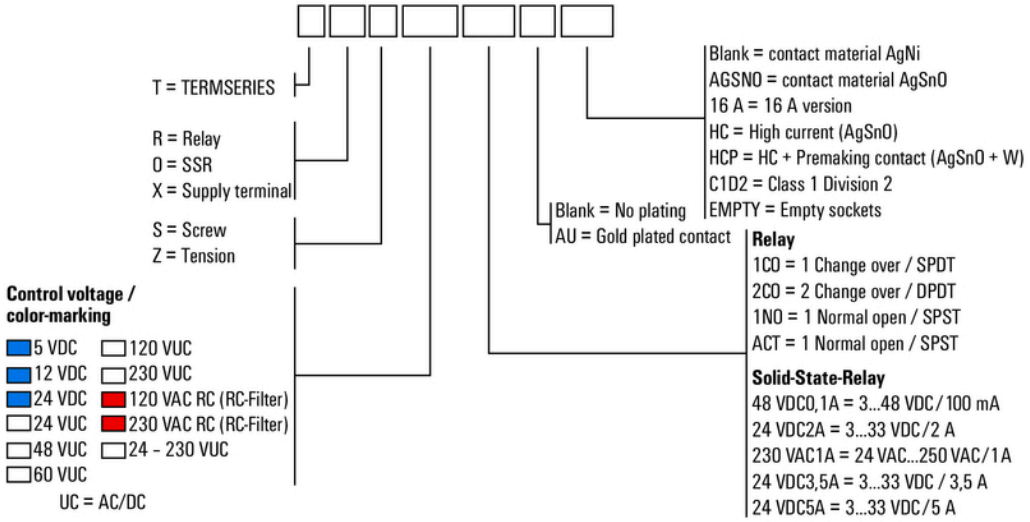

Type codes